HEMLOCK RIDGE
SERVICE DRIVE IMPROVEMENTS

5800 VROOMAN ROAD
LEROY TOWNSHIP, OH 44077

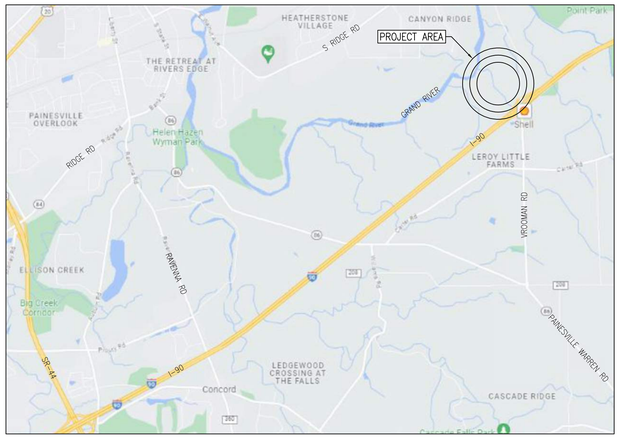

VICINITY MAP
NOT TO SCALE

PARCEL MAP
NOT TO SCALE

PROJECT PARCEL DATA

ADDRESS	**5800** VROOMAN ROAD LEROY TOWNSHIP, OHIO 44077
PARCEL #	07A-027-009
PARCEL AREA	224.820 ACRES
DISTURBED AREA	0.372 ACRES

OWNER

LAKE METROPARKS
11211 SPEAR ROAD
CONCORD TOWNSHIP, OH 44077
SETH OLDHAM
440 639 7275 x1874
SOLDHAM@LAKEMETROPARKS.COM

CIVIL ENGINEER

ROCKAWAY CIVIL LLC
10191 SPERRY ROAD
KIRTLAND, OHIO 44094
JOHN URBANICK, PE 66506
440 655 8182
JURBANICK@ROCKAWAYCIVIL.COM

ENVIRONMENTAL CONSULTANT

LAND SOLUTIONS LLC
34600 CHARDON ROAD, SUITE 7
CYNTHIA PASCHKE
216 570 2659
CINDYPASCHKE@LANDSOLUTIONS-ENV.COM

CIVIL SHEET INDEX

C001	COVER SHEET
C100	PLAN & PROFILE 0+00 TO 9+00
C101	PLAN & PROFILE 9+00 TO 16+37
C102	CULVERT SECTIONS
C200	SWP3-1
C201	SWP3-2
C300	DETAILS

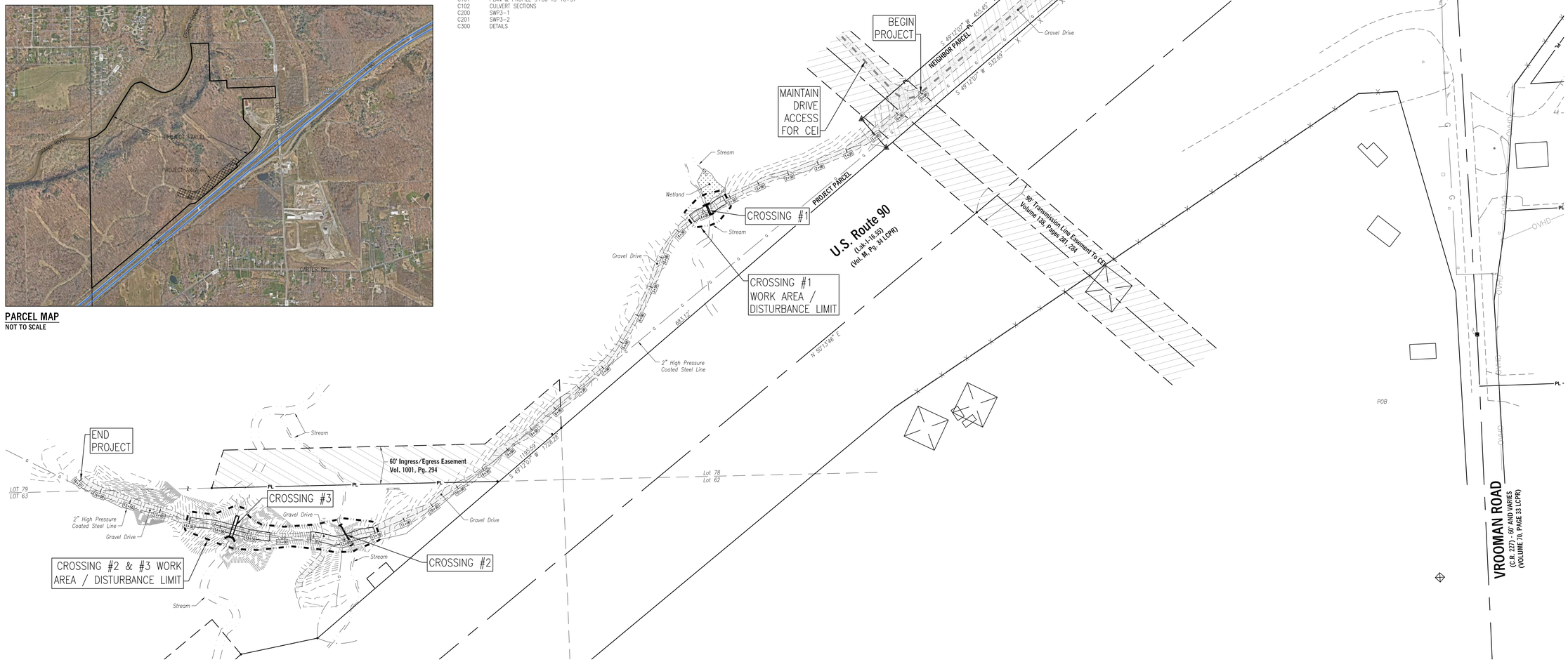

STATE OF OHIO
JOHN URBANICK
E-66506
REGISTERED
PROFESSIONAL ENGINEER

ROCKAWAY CIVIL
Rockaway Civil LLC
10191 Sperry Road Kirtland Ohio 44094
440 655 8182 www.rockawaycivil.com

LAKEMETROPARKS

OHIO811.org Before You Dig

N
0 80'
SCALE: 1"= 80'

HEMLOCK RIDGE
SERVICE DRIVE IMPROVEMENTS
5800 VROOMAN ROAD
LEROY TOWNSHIP, OH 44077

Project Name

Sheet Revision

1	BID	01-16-2025

Project Issue

COVER SHEET

Sheet Name

C001

Sheet #

RC Project # 24-021

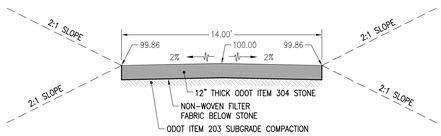

DRIVE SECTION: STA 3+60 to 4+20
SCALE: 1" = 5'

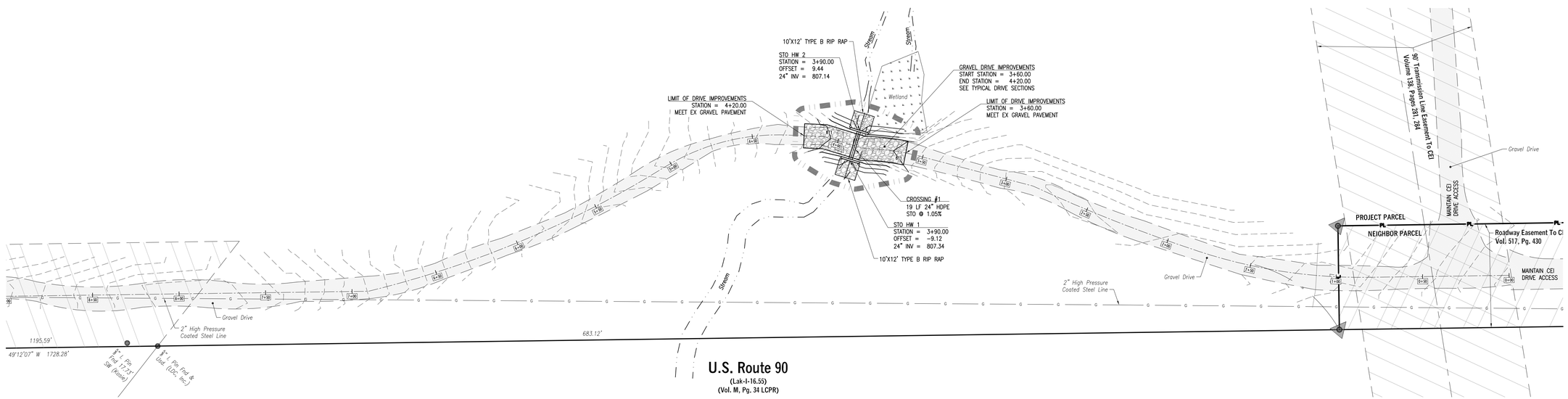

PLAN 0+00 TO 9+00
SACLE: 1" = 30'

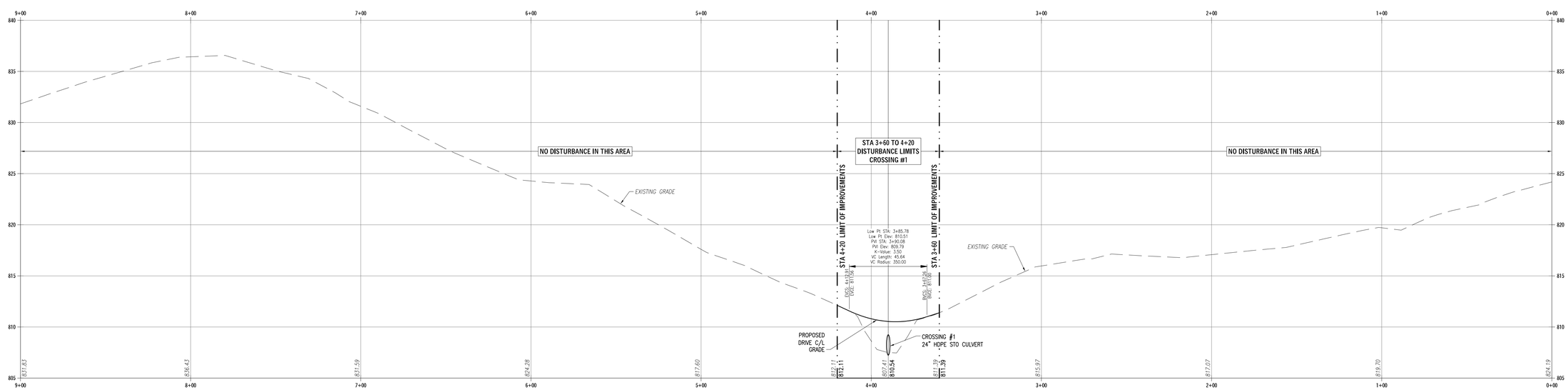

PROFILE 0+00 TO 9+00
HORIZONTAL SCALE: 1" = 30'
VERTICAL SCALE: 1" = 5'

STATE OF OHIO
JOHN URBANICK
E-66506
REGISTERED
PROFESSIONAL ENGINEER

ROCKAWAY CIVIL
Rockaway Civil LLC
10191 Sperry Road Kirtland Ohio 44094
440 655 8182 www.rockawaycivil.com

LAKEMETROPARKS

OHIO811.org
Before You Dig

N
0 30'
SCALE: 1" = 30'

HEMLOCK RIDGE SERVICE DRIVE IMPROVEMENTS

5800 VROOMAN ROAD
LEROY TOWNSHIP, OH 44077

Project Name

Sheet Revision

1	BID	01-16-2025

Project Issue

PLAN & PROFILE 0+00 to 9+00

Sheet Name

C100

Sheet #

RC Project # 24-021

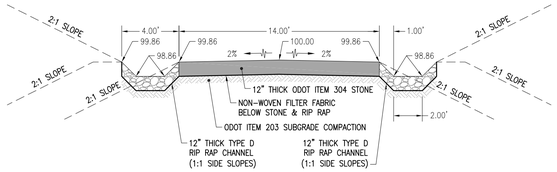

DRIVE SECTION: STA 11+50 to 12+55
SCALE: 1" = 5'

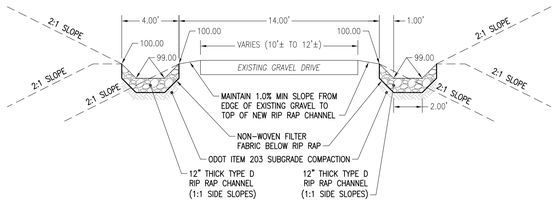

DRIVE SECTION: STA 12+55 to 13+20
SCALE: 1" = 5'

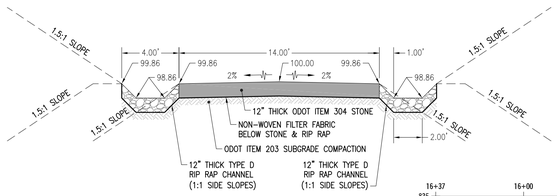

DRIVE SECTION: STA 13+20 to 14+50
SCALE: 1" = 5'

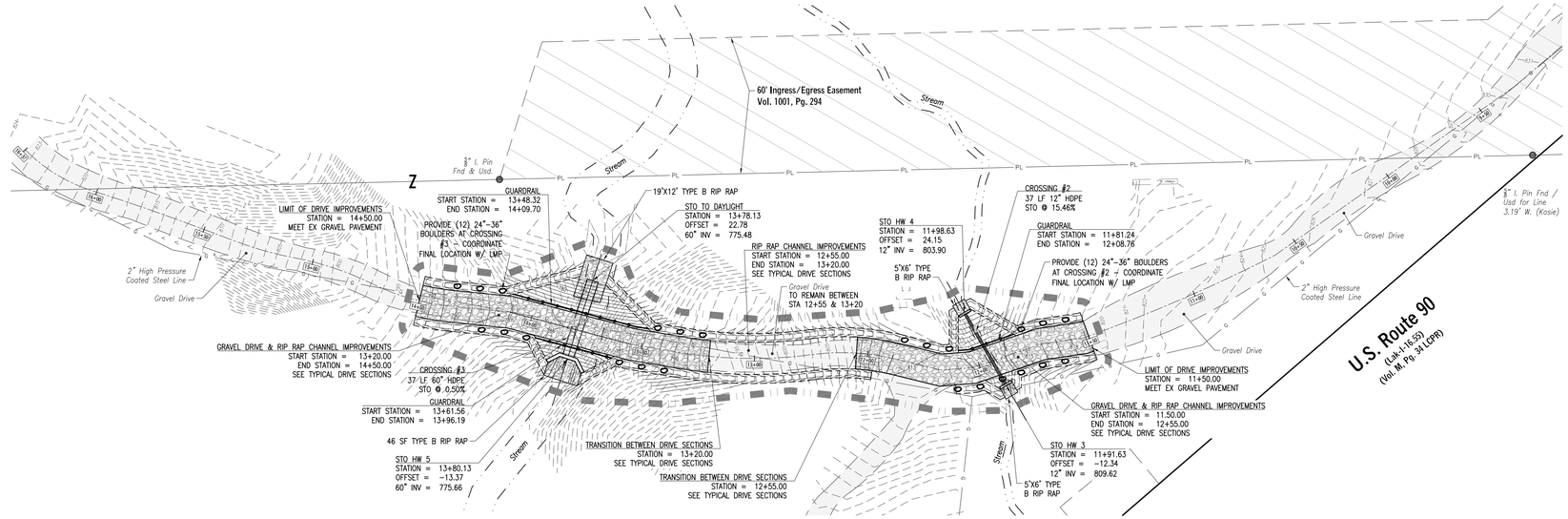

PLAN 9+00 TO 16+37
SCALE: 1" = 30'

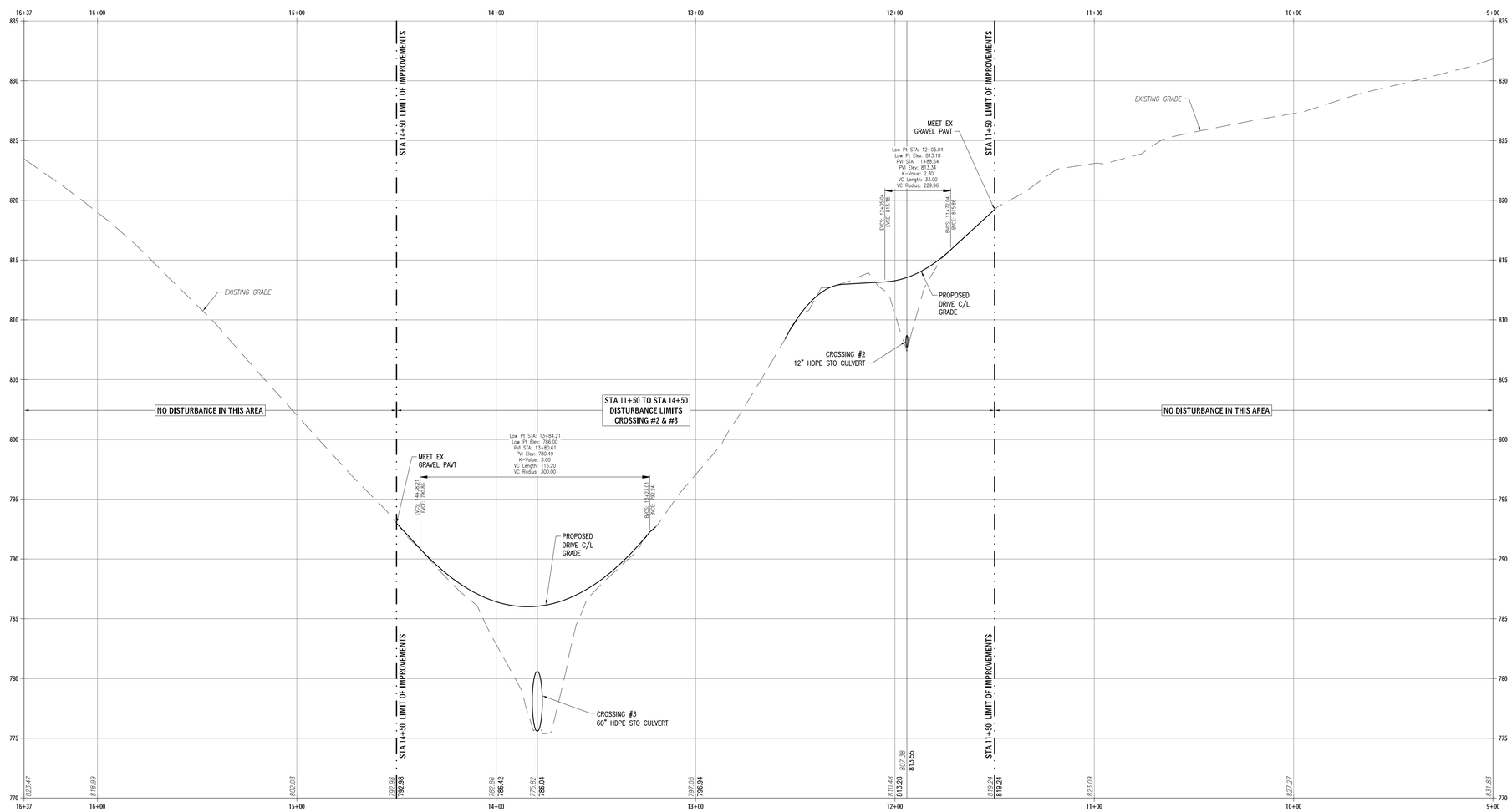

PROFILE 9+00 TO 16+37
HORIZONTAL SCALE: 1" = 30'
VERTICAL SCALE: 1" = 5'

STATE OF OHIO — JOHN URBANICK E-66506 — REGISTERED PROFESSIONAL ENGINEER

ROCKAWAY CIVIL
Rockaway Civil LLC
10191 Sperry Road Kirtland Ohio 44094
440 655 8182 www.rockawaycivil.com

LAKEMETROPARKS

OHIO811.org Before You Dig

N — 0 — 30' — SCALE: 1" = 30'

HEMLOCK RIDGE SERVICE DRIVE IMPROVEMENTS

5800 VROOMAN ROAD
LEROY TOWNSHIP, OH 44077

Project Name

Sheet Revision

1	BID	01-16-2025

Project Issue

PLAN & PROFILE 9+00 to 16+37

Sheet Name

C101

Sheet #

RC Project # 24-021

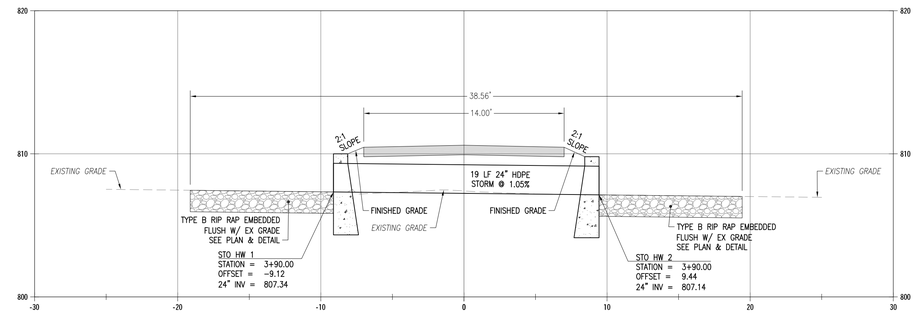

SECTION - CROSSING #1 @ STA 3+90.00
SCALE: 1" = 5'

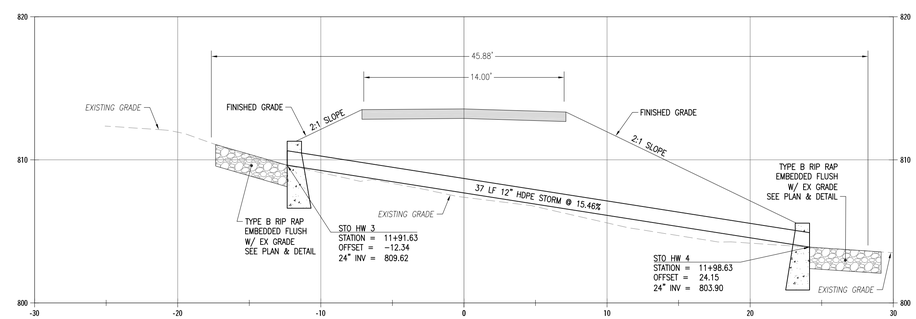

SECTION - CROSSING #2 @ STA 11+94.00
SCALE: 1" = 5'

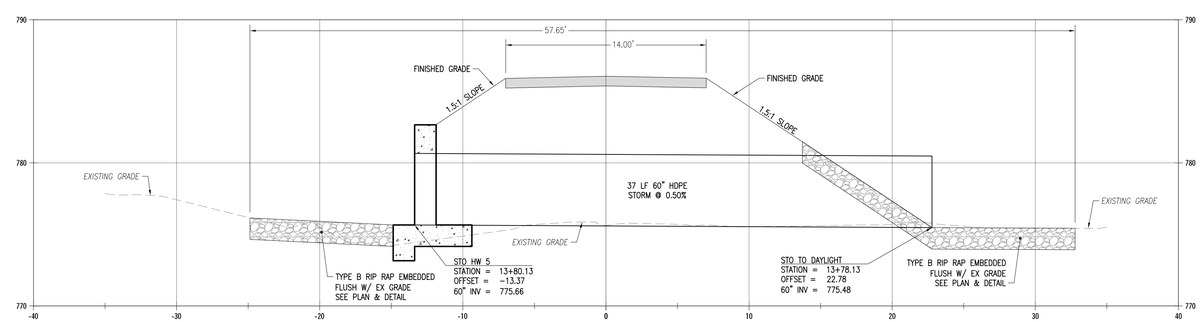

SECTION - CROSSING #3
SCALE: 1" = 5'

STATE OF OHIO
JOHN URBANICK
E-66506
REGISTERED
PROFESSIONAL ENGINEER

ROCKAWAY CIVIL
Rockaway Civil LLC
10191 Sperry Road Kirtland Ohio 44094
440 655 8182 www.rockawaycivil.com

LAKEMETROPARKS

OHIO811.org Before You Dig

HEMLOCK RIDGE SERVICE DRIVE IMPROVEMENTS

5800 VROOMAN ROAD
LEROY TOWNSHIP, OH 44077

Project Name

Sheet Revision

1	BID	01-16-2025

Project Issue

CULVERT SECTIONS

Sheet Name

C102

Sheet #

RC Project # 24-021

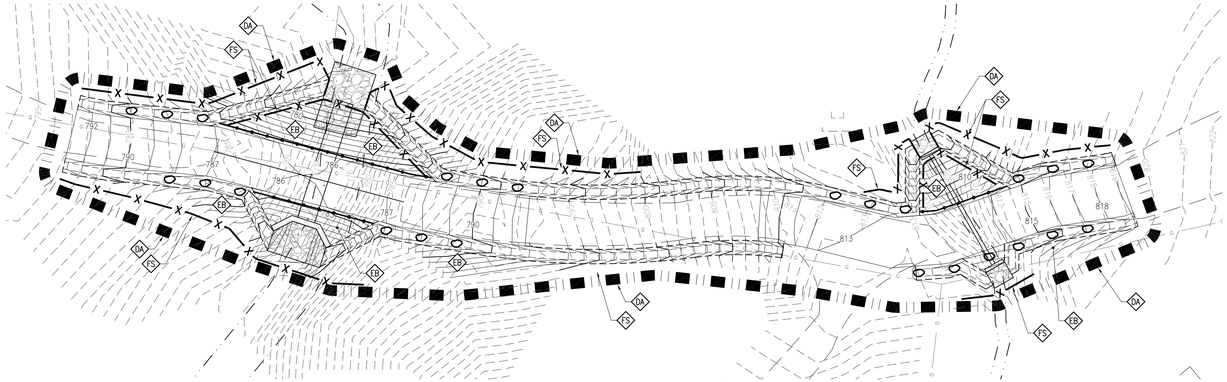

SWP3 - CROSSING #2 & #3
SCALE: 1" = 20'

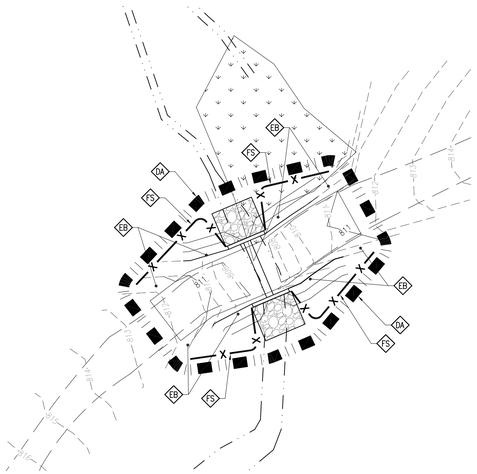

SWP3 - CROSSING #1
SCALE: 1" = 20'

SWP3-1 NOTES

OHIO EPA FACILITY PERMIT NUMBER: N/A – PROJECT WILL DISTURB LESS THAN 1.0 ACRE

SITE DESCRIPTION:

1. THIS PROJECT WILL CONSIST OF REMOVAL & REPLACEMENT OF THE EXISTING GRAVEL DRIVE & INSTALLATION OF THREE NEW STORM CULVERTS, TO PROVIDE VEHICLE ACCESSIBLE STREAM CROSSINGS.
2. THE TOTAL SITE AREA IS 224.820 ACRES AND THE EXPECTED AREA TO BE DISTURBED WITHIN THAT SITE IS 0.372 ACRES.
3. PER THE USDA SOIL SURVEY, THE SOIL TYPES FOR MOST OF THE SITE ARE:
   - GOF GOSPORT SILTY CLAY LOAM
   - LB LOBDELL SILT LOAM
   - PEC2 PIERPONT SILT LOAM
   - PSB PLATEA SILT LOAM
   - TG TIOGA LOAM
   - UOD UDORTHENTS
4. THIS PROJECT CURRENTLY CONSISTS OF A GRAVEL DRIVEWAY THAT HAS BEEN USED TO ACCESS GAS WELLS & POWER LINES (EASEMENT TO CEI). NO OTHER PRIOR LAND USES ARE KNOWN.
5. SEE STORM WATER POLLUTION PREVENTION PLAN IMPLEMENTATION SCHEDULE
6. IMMEDIATE RECEIVING STREAM OR SURFACE WATER – THE STORM WATER THE STORM WATER DRAINS TO TRIBUTARIES OF THE GRAND RIVER.
7. THIS PROJECT IS NOT A SUBDIVIDED DEVELOPMENT
8. THERE ARE NOT STORM WATER DISCHARGES ASSOCIATED WITH DEDICATED ASPHALT OR DEDICATED CONCRETE PLANTS ASSOCIATED WITH THIS SITE.
9. SEE COVER SHEET FOR ADDITIONAL PROJECT INFORMATION.

CONTACT INFORMATION:

10. THE OPERATOR RESPONSIBLE FOR IMPLEMENTATION OF STORM WATER POLLUTION PREVENTION PLAN:
    NOT KNOWN AT THIS TIME
11. THE CERTIFIED PROFESSIONAL WHO PREPARED THE COMPREHENSIVE STORM WATER MANAGEMENT PLAN AND IS AUTHORIZED TO AMEND SAID PLAN.
    JOHN URBANICK – ROCKAWAY CIVIL
    10191 SPERRY ROAD
    KIRTLAND, OH 44094
    JURBANICK@ROCKAWAYCIVIL.COM
12. THE SITE OWNER:
    SETH OLDHAM – LAKE METROPARKS
    11211 SPEAR ROAD
    CONCORD TOWNSHIP, OH 44077
    SOLDHAM@LAKEMETROPARKS.COM
13. SEE APPENDIX I – GRADING AND STABILIZATION ACTIVITIES LOG
14. SEE SWP3-1 AND SWP3-2
15. OTHER CONTROLS:
    - IF SUBSTANCES SUCH AS OIL, DIESEL FUEL, HYDRAULIC FLUID, ANTIFREEZE, ETC. ARE SPILLED, LEAKED, OR RELEASE ONTO SOIL, THE SOIL SHOULD BE DUG UP AND DISPOSED OF AT A LICENSED SANITARY LANDFILL OR OTHER APPROVED PETROLEUM CONTAMINATED SOIL REMEDIATION FACILITY (NOT A CONSTRUCTION/DEMOLITION DEBRIS LANDFILL).
    - SPILLS ON PAVEMENT SHALL BE ABSORBED WITH SAWDUST, KITTY LITTER, OR OTHER ABSORBENT MATERIAL & DISPOSED OF WITH THE TRASH AT A LICENSED SANITARY LANDFILL.
    - HAZARDOUS OR INDUSTRIAL WASTES SUCH AS MOST SOLVENTS, GASOLINE, OIL-BASED PAINTS, AND CEMENT CURING COMPOUNDS REQUIRE SPECIAL HANDLING.
    - LARGE PETROLEUM SPILLS (>25 GALLONS) SHALL BE REPORTED TO THE OHIO EPA (1-800-282-9378), LOCAL FIRE DEPARTMENT, AND THE LOCAL EMERGENCY PLANNING COMMITTEE WITHIN 30 MINUTES OF THE DISCOVERY OF THE RELEASE.
19. PROJECT DATES (APPROXIMATE):
    START DATE MARCH 2025
    END DATE DEC 2025

SWP3-1 KEY NOTE LEGEND

DA = EARTH DISTURBANCE AREA
CE = CONSTRUCTION ENTRANCE – UTILIZE THE EXISTING GRAVEL DRIVE TO ACCESS THE PROJECT AREAS
SA = STAGING AREA – SHOWN FOR REFERENCE ONLY – COORDINATE FINAL LOCATION WITH LMP & NEIGHBORING PROPERLY OWNER, AS NECESSARY.
WC = WASTE CONTAINER AREA – SHOWN FOR REFERENCE ONLY – COORDINATE FINAL LOCATION WITH LMP & NEIGHBORING PROPERLY OWNER, AS NECESSARY.
CW = CONCRETE WASHOUT AREA – SHOWN FOR REFERENCE ONLY – COORDINATE FINAL LOCATION WITH LMP & NEIGHBORING PROPERLY OWNER, AS NECESSARY.
MS = MATERIAL STOCKPILE AREA, PROVIDE FILTER SOCK AT LIMITS – SHOWN FOR REFERENCE ONLY – COORDINATE FINAL LOCATION WITH LMP & NEIGHBORING PROPERLY OWNER, AS NECESSARY.
FS = FILTER SOCK
EB = EROSION CONTROL BLANKETS – REQUIRED ON ALL DISTURBED SLOPES 6:1 AND STEEPER

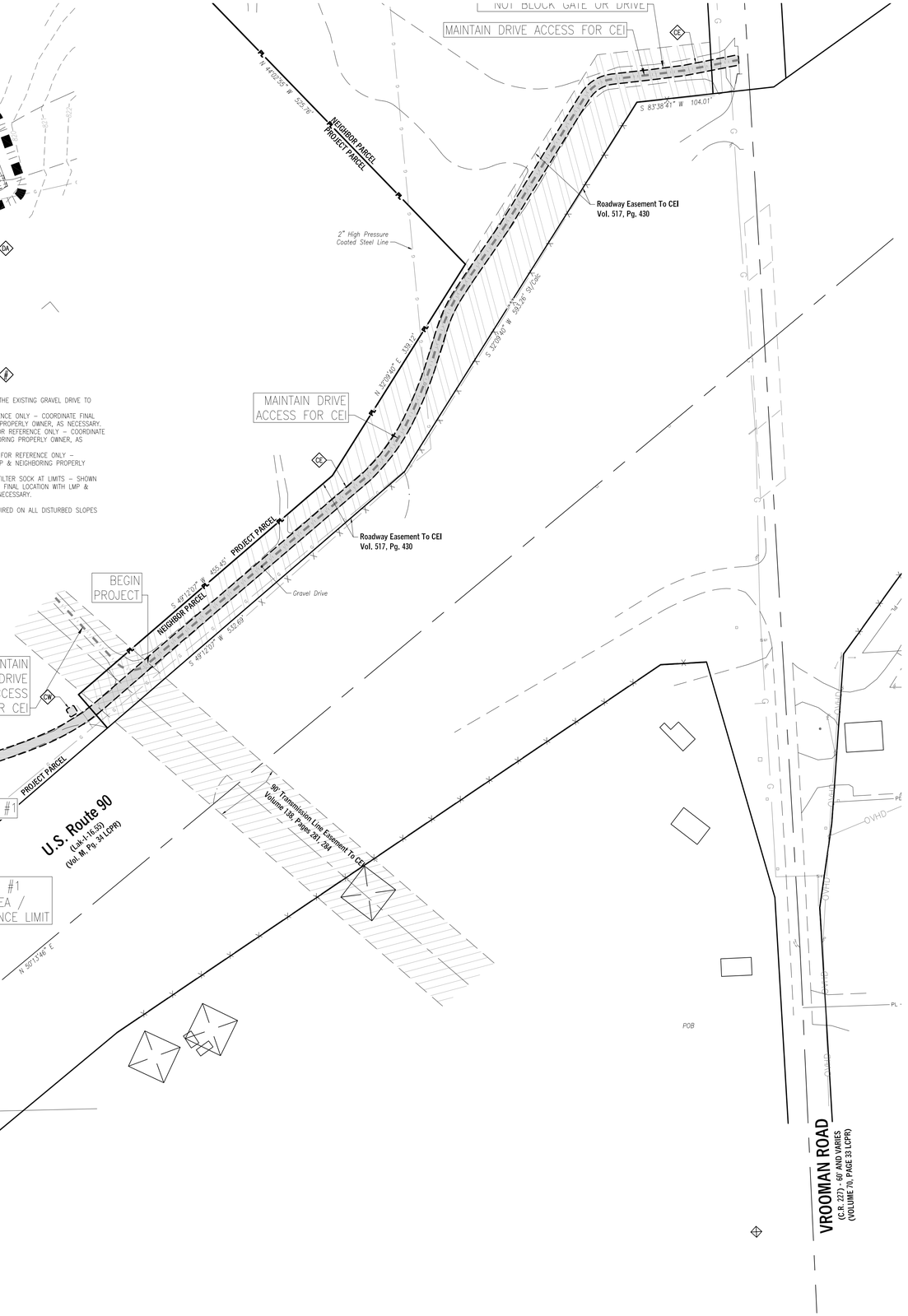

SWP3 - OVERALL PROJECT AREA
SCALE: 1" = 80'

STATE OF OHIO
JOHN URBANICK
E-66506
REGISTERED
PROFESSIONAL ENGINEER

ROCKAWAY CIVIL
Rockaway Civil LLC
10191 Sperry Road Kirtland Ohio 44094
440 655 8182 www.rockawaycivil.com

LAKEMETROPARKS

OHIO811.org Before You Dig

SCALE: 1" = 20'

HEMLOCK RIDGE SERVICE DRIVE IMPROVEMENTS

5800 VROOMAN ROAD
LEROY TOWNSHIP, OH 44077

Project Name

Sheet Revision

1	BID	01-16-2025

Project Issue

SWP3-1

Sheet Name

C200

Sheet #

RC Project # 24-021

ADDITIONAL CONSTRUCTION SITE POLLUTION CONTROLS
(PER ODNR RAINWATER & LAND DEVELOPMENT MANUAL)

DESCRIPTION
ALTHOUGH SEDIMENT IS THE PRIMARY POLLUTANT OF CONCERN RESULTING FROM CONSTRUCTION ACTIVITY, OTHER POLLUTANTS NEED TO BE CONSIDERED AS WELL. THESE INCLUDE PETROCHEMICALS: FUEL, OIL AND ASPHALT; AND CONSTRUCTION CHEMICALS AND MATERIALS: PAINTS, SOLVENTS, FERTILIZER, SOIL ADDITIVES, CONCRETE WASH WATER, ETC. ALSO INCLUDED ARE SOLID WASTES AND CONSTRUCTION DEBRIS. KEEPING THESE SUBSTANCES FROM POLLUTING RUNOFF CAN BE ACCOMPLISHED TO A LARGE EXTENT THROUGH GOOD HOUSEKEEPING AND FOLLOWING THE MANUFACTURER'S RECOMMENDATIONS FOR THEIR USE AND DISPOSAL.

CONDITION WHERE PRACTICE APPLIES
WASTES GENERATED BY CONSTRUCTION ACTIVITIES (I.E. CONSTRUCTION MATERIALS SUCH AS PAINTS, SOLVENTS, FUELS, CONCRETE, WOOD, ETC.) MUST BE DISPOSED OF IN ACCORDANCE WITH ORC 3734 AND ORC 3714. HAZARDOUS AND TOXIC SUBSTANCES ARE USED ON VIRTUALLY ALL CONSTRUCTION-SITES. GOOD MANAGEMENT OF THESE SUBSTANCES IS ALWAYS NEEDED.

PLANNING CONSIDERATIONS
GOOD EROSION AND SEDIMENT CONTROL WILL PREVENT SOME POLLUTANTS IN ADDITION TO SEDIMENT FROM LEAVING THE SITE; HOWEVER, POLLUTANTS CARRIED IN SOLUTION OR AS SURFACE FILMS ON RUNOFF WATER WILL BE CARRIED THROUGH MOST EROSION AND SEDIMENT CONTROL PRACTICES. THESE POLLUTANTS BECOME NEARLY IMPOSSIBLE TO CONTROL ONCE CARRIED OFFSITE IN RUNOFF. ADDING TO THE PROBLEM IS THE FACT THAT CONSTRUCTION WASTES, MANY CONTAINING TOXIC CHEMICALS, ARE ROUTINELY BURIED ON-SITE, DUMPED ON THE GROUND, POURED DOWN A STORM DRAIN, OR DISPOSED OF WITH CONSTRUCTION DEBRIS. SO WHILE TYPICAL EROSION AND SEDIMENT-CONTROL PRACTICES ARE IMPORTANT FOR CONTROLLING OTHER POLLUTANTS, ADDITIONAL PREVENTATIVE MEASURES ARE NEEDED.

REDUCING POLLUTANTS OTHER THAN SEDIMENTS DEPENDS HEAVILY ON CONSTRUCTION PERSONNEL AND HOW THEY CARRY OUT THEIR OPERATIONS. TO HELP FACILITATE THIS, PLANS SHOULD CONTAIN STANDARD NOTES CLEARLY STATING REQUIREMENTS TO CONTRACTORS. IT ALSO MAY BE APPROPRIATE TO INCLUDE REQUIREMENTS FOR SPECIFIC PROVISIONS FOR HAZARDOUS MATERIALS STORAGE, HANDLING AND DISPOSAL.

REQUIREMENTS
1. EDUCATE CONSTRUCTION PERSONNEL, INCLUDING SUBCONTRACTORS WHO MAY USE OR HANDLE HAZARDOUS OR TOXIC MATERIALS, MAKING THEM AWARE OF THE FOLLOWING GENERAL GUIDELINES:

   DISPOSAL AND HANDLING OF HAZARDOUS AND OTHER CONSTRUCTION WASTE

   DO:
   - PREVENT SPILLS
   - USE PRODUCTS UP
   - FOLLOW LABEL DIRECTIONS FOR DISPOSAL
   - REMOVE LIDS FROM EMPTY BOTTLES AND CANS WHEN DISPOSING IN TRASH
   - RECYCLE WASTES WHENEVER POSSIBLE

   DON'T:
   - DON'T POUR INTO WATERWAYS, STORM DRAINS OR ONTO THE GROUND
   - DON'T POUR DOWN THE SINK, FLOOR DRAIN OR SEPTIC TANKS
   - DON'T BURY CHEMICALS OR CONTAINERS
   - DON'T BURN CHEMICALS OR CONTAINERS
   - DON'T MIX CHEMICALS TOGETHER

2. WASTE DISPOSAL CONTAINERS SHALL BE PROVIDED FOR THE PROPER COLLECTION OF ALL WASTE MATERIAL INCLUDING CONSTRUCTION DEBRIS, SANITARY GARBAGE, PETROLEUM PRODUCTS AND ANY HAZARDOUS MATERIALS TO BE USED ON-SITE. CONTAINERS SHALL BE COVERED AND NOT LEAKING. ALL WASTE MATERIAL SHALL BE DISPOSED OF AT FACILITIES APPROVED FOR THAT MATERIAL. CONSTRUCTION DEMOLITION AND DEBRIS (CD&D) WASTE MUST BE DISPOSED OF IN ACCORDANCE WITH ORC 3714 AT AN APPROVED OHIO EPA CD&D LANDFILL.
3. NO CONSTRUCTION RELATED WASTE MATERIALS ARE TO BE BURIED ON-SITE. BY EXCEPTION, CLEAN FILL (BRICKS, HARDENED CONCRETE, SOIL) MAY BE UTILIZED IN A WAY THAT DOES NOT ENCROACH UPON NATURAL WETLANDS, STREAMS OR THEIR FLOODPLAINS. FILLING OF STREAM SIDE AREAS IS FILL MAY NOT RESULT IN THE CONTAMINATION OF WATERS OF THE STATE, UNLESS PROHIBITED BY LOCAL ORDINANCE OR ZONING.
4. CONSTRUCTION AND DEMOLITION DEBRIS (CD&D) DISPOSAL. CD&D WASTE MUST BE DISPOSED OF IN ACCORDANCE WITH ORC 3714 AT AN APPROVED OHIO EPA CD&D LANDFILL. CD&D WASTE IS DEFINED AS ALL MATERIALS ATTACHED TO A STRUCTURE, WHICH IS BEING DEMOLISHED (FOR MATERIALS CONTAINING ASBESTOS SEE ITEM 12).
5. HANDLING CONSTRUCTION CHEMICALS. MIXING, PUMPING, TRANSFERRING OR OTHER HANDLING OF CONSTRUCTION CHEMICALS SUCH AS FERTILIZER, LIME, ASPHALT, CONCRETE DRYING COMPOUNDS, AND ALL OTHER POTENTIALLY HAZARDOUS MATERIALS SHALL BE PERFORMED IN AN AREA AWAY FROM ANY WATERCOURSE, DITCH OR STORM DRAIN.
6. EQUIPMENT FUELING AND MAINTENANCE, OIL CHANGING, ETC., SHALL BE PERFORMED AWAY FROM WATERCOURSES, DITCHES OR STORM DRAINS, IN AN AREA DESIGNATED FOR THAT PURPOSE. THE DESIGNATED AREA SHALL BE EQUIPPED FOR RECYCLING OIL AND CATCHING SPILLS. SECONDARY CONTAINMENT SHALL BE PROVIDED FOR ALL FUEL OIL STORAGE TANKS. THESE AREAS MUST BE INSPECTED EVERY SEVEN DAYS AND WITHIN 24 HRS. OF A 0.5 INCH OR GREATER RAIN EVENT TO ENSURE THERE ARE NO EXPOSED MATERIALS WHICH WOULD CONTAMINATE STORM WATER. SITE OPERATORS MUST BE AWARE THAT SPILL PREVENTION CONTROL AND COUNTERMEASURES (SPCC) REQUIREMENTS MAY APPLY. AN SPCC PLAN IS REQUIRED FOR SITES WITH ONE SINGLE ABOVEGROUND TANK OF 660 GALLONS OR MORE, ACCUMULATIVE ABOVEGROUND STORAGE OF 1330 GALLONS OR MORE, OR 42,000 GALLONS OF UNDERGROUND STORAGE. SOILS THAT HAVE BECOME CONTAMINATED MUST BE DISPOSED OF ACCORDANCE WITH ITEM 8 □CONTAMINATED SOILS.
7. CONCRETE WASH WATER/WASH OUTS. CONCRETE WASH WATER SHALL NOT BE ALLOWED TO FLOW TO STREAMS, DITCHES, STORM DRAINS, OR ANY OTHER WATER CONVEYANCE. A SUMP OR PIT WITH NO POTENTIAL FOR DISCHARGE SHALL BE CONSTRUCTED IF NEEDED TO CONTAIN CONCRETE WASH WATER. FIELD TILE OR OTHER SUBSURFACE DRAINAGE STRUCTURES WITHIN 10 FT. OF THE SUMP SHALL BE CUT AND PLUGGED. FOR SMALL PROJECTS, TRUCK CHUTES MAY BE RINSED ON THE LOT AWAY FROM ANY WATER CONVEYANCES.
8. CONTAMINATED SOILS. IF SUBSTANCES SUCH AS OIL, DIESEL FUEL, HYDRAULIC FLUID, ANTIFREEZE, ETC. ARE SPILLED, LEAKED, OR RELEASED ONTO THE SOIL, THE SOIL SHOULD BE DUG UP AND DISPOSED OF AT LICENSED SANITARY LANDFILL OR OTHER APPROVED PETROLEUM CONTAMINATED SOIL REMEDIATION FACILITY (NOT A CONSTRUCTION/DEMOLITION DEBRIS LANDFILL). PLEASE BE AWARE THAT STORM WATER RUNOFF ASSOCIATED WITH CONTAMINATED SOILS ARE NOT AUTHORIZED UNDER OHIO EPA'S GENERAL STORM WATER PERMIT ASSOCIATED WITH CONSTRUCTION ACTIVITIES. IN THE EVENT THERE ARE LARGE EXTENSIVE AREAS OF CONTAMINATED SOILS ADDITIONAL MEASURES ABOVE AND BEYOND THE CONDITIONS OF OHIO EPA'S GENERAL CONSTRUCTION STORM WATER PERMIT WILL BE REQUIRED. DEPENDING ON THE EXTENT OF CONTAMINATION, ADDITIONAL TREATMENT AND/OR COLLECTION AND DISPOSAL MAY BE REQUIRED. ALL STORM WATER DISCHARGES ASSOCIATED WITH THE CONTAMINATED SOILS MUST BE AUTHORIZED UNDER AN ALTERNATE NPDES (NATIONAL POLLUTANT DISCHARGE ELIMINATION SYSTEM) PERMIT.
9. SPILL REPORTING REQUIREMENTS: SPILLS ON PAVEMENT SHALL BE ABSORBED WITH SAWDUST, KITTY LITTER OR OTHER ABSORBENT MATERIAL AND DISPOSED OF WITH THE TRASH AT A LICENSED SANITARY LANDFILL. HAZARDOUS OR INDUSTRIAL WASTES SUCH AS MOST SOLVENTS, GASOLINE, OIL-BASED PAINTS, AND CEMENT CURING COMPOUNDS REQUIRE SPECIAL HANDLING. SPILLS SHALL BE REPORTED TO OHIO EPA (1-800-282-9378). SPILLS OF 25 GALLONS OR MORE OF PETROLEUM PRODUCTS SHALL BE REPORTED TO OHIO EPA (1-800-282-9378), THE LOCAL FIRE DEPARTMENT, AND THE LOCAL EMERGENCY PLANNING COMMITTEE WITHIN 30 MIN. OF THE DISCOVERY OF THE RELEASE. ALL SPILLS, WHICH RESULT IN CONTACT WITH WATERS OF THE STATE, MUST BE REPORTED TO OHIO EPA'S HOTLINE.
10. OPEN BURNING. NO MATERIALS MAY BE BURNED WHICH CONTAIN RUBBER, GREASE, ASPHALT, OR PETROLEUM PRODUCTS SUCH AS TIRES, CARS, AUTO PARTS, PLASTICS OR PLASTIC COATED WIRE. (SEE OAC 3745-19) OPEN BURNING IS NOT ALLOWED IN RESTRICTED AREAS. RESTRICTED AREAS ARE DEFINED AS: 1) WITHIN CORPORATION LIMITS; 2) WITHIN 1000 FEET OUTSIDE A MUNICIPAL CORPORATION HAVING A POPULATION OF 1000 TO 10,000; AND 3) A ONE MILE ZONE OUTSIDE OF A CORPORATION OF 10,000 OR MORE. OUTSIDE A RESTRICTED AREA, NO OPEN BURNING CAN TAKE PLACE WITHIN A 1000 FEET OF AN INHABITED BUILDING LOCATED OFF THE PROPERTY WHERE THE FIRE IS SET. OPEN BURNING IS PERMISSIBLE IN A RESTRICTED AREA FOR THE FOLLOWING ACTIVITIES: HEATING TAR, WELDING AND ACETYLENE TORCHES, SMUDGE POTS AND SIMILAR OCCUPATIONAL NEEDS, AND HEATING FOR WARMTH OR OUTDOOR BARBEQUES. OUTSIDE OF RESTRICTED AREAS, OPEN BURNING IS PERMISSIBLE FOR LANDSCAPE WASTES (PLANT MATERIAL), LAND-CLEARING WASTES (PLANT MATERIAL, WITH PRIOR WRITTEN PERMISSION FROM OHIO EPA), AND AGRICULTURAL WASTES (MATERIAL GENERATED BY CROP, HORTICULTURAL, OR LIVESTOCK PRODUCTION PRACTICES. THIS INCLUDES FENCE POSTS AND SCRAP LUMBER, BUT NOT BUILDINGS).
11 DUST CONTROL/SUPPRESSANTS. DUST CONTROL IS REQUIRED TO PREVENT NUISANCE CONDITIONS. DUST CONTROLS MUST BE USED IN ACCORDANCE WITH THE MANUFACTURER'S SPECIFICATIONS AND NOT BE APPLIED IN A MANNER, WHICH WOULD RESULT IN A DISCHARGE TO WATERS OF THE STATE. ISOLATION DISTANCES FROM BRIDGES, CATCH BASINS, AND OTHER DRAINAGEWAYS MUST BE OBSERVED. APPLICATION (EXCLUDING WATER) MAY NOT OCCUR WHEN PRECIPITATION IS IMMINENT AS NOTED IN THE SHORT TERM FORECAST. USED OIL MAY NOT BE APPLIED FOR DUST CONTROL.
12. OTHER AIR PERMITTING REQUIREMENTS: ALL CONTRACTORS AND SUB CONTRACTORS MUST BE MADE AWARE THAT CERTAIN ACTIVITIES ASSOCIATED WITH CONSTRUCTION WILL REQUIRE AIR PERMITS. ACTIVITIES INCLUDING BUT NOT LIMITED TO MOBILE CONCRETE BATCH PLANTS, MOBILE ASPHALT PLANTS, CONCRETE CRUSHERS, LARGE GENERATORS, ETC., WILL REQUIRE SPECIFIC OHIO EPA AIR PERMITS FOR INSTALLATION AND OPERATION. THESE ACTIVITIES MUST SEEK AUTHORIZATION FROM THE CORRESPONDING DISTRICT OF OHIO EPA. NOTIFICATION FOR RESTORATION AND DEMOLITION MUST BE SUBMITTED TO OHIO EPA FOR ALL COMMERCIAL SITES TO DETERMINE IF ASBESTOS CORRECTIVE ACTIONS ARE REQUIRED.
13. PROCESS WASTE WATER/LEACHATE MANAGEMENT. ALL CONTRACTORS SHALL BE MADE AWARE THAT OHIO EPA'S CONSTRUCTION GENERAL PERMIT ONLY ALLOWS THE DISCHARGE OF STORM WATER. OTHER WASTE STREAMS/DISCHARGES INCLUDING BUT NOT LIMITED TO VEHICLE AND/OR EQUIPMENT WASHING, LEACHATE ASSOCIATED WITH ON-SITE WASTE DISPOSAL, CONCRETE WASH OUTS, ETC. ARE A PROCESS WASTEWATER. THEY ARE NOT AUTHORIZED FOR DISCHARGE UNDER THE GENERAL STORM WATER PERMIT ASSOCIATED WITH CONSTRUCTION ACTIVITIES. ALL PROCESS WASTEWATERS MUST BE COLLECTED AND PROPERLY DISPOSED AT AN APPROVED DISPOSAL FACILITY. IN THE EVENT THERE ARE LEACHATE OUTBREAKS ASSOCIATED WITH ONSITE DISPOSAL, MEASURES MUST BE TAKEN TO ISOLATE THIS DISCHARGE FOR COLLECTION AND PROPER DISPOSAL. INVESTIGATIVE MEASURES AND CORRECTIVE ACTIONS MUST BE IMPLEMENTED TO IDENTIFY AND ELIMINATE THE SOURCE OF ALL LEACHATE OUTBREAKS.
14. TRENCH AND GROUND WATER CONTROL - NO SEDIMENT LADEN OR TURBID DISCHARGES FROM ARE PERMITTED TO DISCHARGE TO WATER RESOURCES OR WETLANDS. TRENCH OR GROUND WATER CONTAINING SEDIMENT MUST PASS THROUGH A SEDIMENT SETTLING POND OR OTHER EQUALLY EFFECTIVE SEDIMENT CONTROL DEVICE PRIOR TO DISCHARGE. ALTERNATIVELY, SEDIMENT MAY BE REMOVED BY SETTLING IN PLACE OR BY DEWATERING INTO FILTER BAG, SUMP PIT OR EQUALLY EFFECTIVE PRACTICE. GROUND WATER DEWATERING THAT DOES NOT CONTAIN SEDIMENT OR OTHER POLLUTANTS IS NOT REQUIRED TO BE TREATED PRIOR TO DISCHARGE. ENSURE THAT THE NON-SEDIMENT LADEN GROUND WATER DOES NOT BECOME POLLUTANT LADEN BY FLOWING OVER DISTURBED SOIL OR POLLUTANT SOURCES.
15. PERMIT TO INSTALL (PTI) REQUIREMENTS: ALL CONTRACTORS AND SUB CONTRACTORS MUST BE MADE AWARE THAT A PTI MUST BE SUBMITTED AND APPROVED BY OHIO EPA PRIOR TO THE CONSTRUCTION OF ALL CENTRALIZED SANITARY SYSTEMS, INCLUDING SEWER EXTENSIONS, AND SEWERAGE SYSTEMS (EXCEPT THOSE SERVING ONE, TWO, AND THREE FAMILY DWELLINGS) AND POTABLE WATER LINES. THE ISSUANCE OF AN OHIO EPA CONSTRUCTION GENERAL STORM WATER PERMIT DOES NOT AUTHORIZE THE INSTALLATION OF ANY SEWERAGE SYSTEM WHERE OHIO EPA HAS NOT APPROVED A PTI.

STORM WATER POLLUTION PREVENTION PLAN IMPLEMENTATION SCHEDULE:

ITEMS LISTED IN THIS IMPLEMENTATION SCHEDULE ARE TO BE ADDRESSED CHRONOLOGICALLY IN THE ORDER THEY ARE LISTED. THIS IMPLEMENTATION SCHEDULE IS TO BE USED AS A GENERAL GUIDE FOR STORM WATER POLLUTION PREVENTION ITEMS. AT A MINIMUM, ALL EROSION AND SEDIMENT CONTROLS ARE TO BE INSPECTED AT LEAST ONCE EVERY 7 DAYS AND WITHIN 24 HOURS OF ANY STORM EVENT GREATER THAN 0.5 INCH PER 24 HOUR PERIOD. EROSION AND SEDIMENT CONTROLS THAT ARE FOUND TO BE IN NEED OF REPAIR DURING THE INSPECTION ARE TO BE REPAIRED WITHIN 3 DAYS OF THE INSPECTION.

1. CONTRACTOR IS TO REVIEW THIS PLAN PRIOR TO INITIATING ANY WORK ON SITE. THE CONTRACTOR IS ALSO RESPONSIBLE FOR REVIEWING AND OBTAINING AN NPDES PERMIT FROM THE OHIO EPA PRIOR TO INITIALIZATION OF WORK ON THE SITE
2. CONSTRUCTION ACCESS DRIVE SHALL BE LIMITED AS SHOWN ON THE PLANS . ALL VEHICLES ENTERING THE SITE DURING CONSTRUCTION ARE TO USE THIS DRIVE FOR INGRESS AND EGRESS. THIS IS THE ONLY POINT OF INGRESS AND EGRESS TO BE USED DURING THE ENTIRE CONSTRUCTION PROCESS IN ORDER TO REDUCE CONSTRUCTION MATERIALS FROM BEING MOVED ONTO PUBLIC ROADWAYS. THE DRIVE IS TO BE INSPECTED FOR INTEGRITY AT THE END OF EACH DAY. REPAIRS ARE TO BE MADE AND THE DRIVE SHALL BE CLEANED AS NECESSARY
3. THE LIMITS OF DISTURBANCE / CLEARING SHALL BE STAKED OUT PRIOR TO THE START OF CONSTRUCTION ACTIVITIES.
4. THE STAGING AREA IS TO BE INSTALLED AT THE LOCATION DEPICTED ON THIS SWPPP. ALL VEHICLES THAT ARE NOT IN USE OR ARE TO REMAIN OVERNIGHT ARE TO BE KEPT IN THE STAGING AREA AND SHALL NOT LIE IDLE IN ANY OTHER AREAS ON SITE.
5. INSTALL THE CONCRETE WASHOUT PIT AND BRING WASTE CONTAINERS TO THE SITE IMMEDIATELY. THE GENERAL CONTRACTOR IS RESPONSIBLE FOR ENSURING THAT WASTE CONTROL PROCEDURES ARE BEING PERFORMED TO PREVENT POLLUTION INTO THE STORM WATER SYSTEM DURING CONSTRUCTION.
6. CONTRACTOR IS TO INSTALL ALL SEDIMENT AND EROSION CONTROL DEVICES PRIOR TO THE START OF DEMOLITION. EROSION AND SEDIMENT CONTROLS ARE TO BE INSTALLED WITHIN 7 DAYS OF GRUBBING. THESE ITEMS INCLUDE, BUT ARE NOT LIMITED TO, FILTER SOCKS, SILT FENCE, DANDY BAGS AND INLET PROTECTION. SILT FENCE POSTS ARE TO BE SET A MAXIMUM OF 6' FROM EACH OTHER AND THE ENDS OF THE GEOTEXTILE FABRIC OF THE SILT FENCE ARE TO BE SLOPED TOWARD THE UP SLOPE OF THE AREA IT IS SERVING TO PREVENT RUNOFF FROM GOING AROUND THE ENDS OF THE SILT FENCE. SILT FENCE IS TO BE INSPECTED AT THE BEGINNING OF EACH DAY AND REPAIRS ARE TO BE MADE IMMEDIATELY. REPAIRS MAY INCLUDE, BUT ARE NOT LIMITED TO THE FOLLOWING: TEARS IN THE GEOTEXTILE FABRIC, COLLAPSED POSTS FROM TOO MUCH RUNOFF OF SILT / SOIL, MISDIRECTION OF SEDIMENT DUE TO IMPROPER INSTALLATION OF EROSION, VANDALISM, ETC.
7. THE CONTRACTOR MUST INSTALL EROSION CONTROLS AND SEDIMENT CONTROLS INCLUDING, BUT NOT LIMITED TO, FILTER SOCKS, SILT FENCE, DIVERSION BERMS, SEDIMENT TRAPS) AS MORE AREAS BECOME DISTURBED THROUGHOUT CONSTRUCTION. THIS SHALL BE DONE PRIOR TO DISTURBING PREVIOUSLY UNDISTURBED LANDS
8. ALL TRENCH AND GROUND WATER COLLECTED IS TO BE PUMPED INTO THE SEDIMENT TRAP TO BE TREATED FOR WATER QUALITY AND DEWATERING DURING CONSTRUCTION.
9. THE SOIL IS TO BE STRIPPED OF ITS TOP ORGANIC LAYER AS NECESSARY ONLY AFTER ALL SEDIMENT AND EROSION CONTROLS HAVE BEEN INSTALLED AND INSPECTED FOR PROPER OPERATION.
10. CLEARING OF THE SITE AND STRIPPING OF EXISTING TOPSOIL WILL BE PERFORMED IN A MANNER THAT DOES NOT DISTURB NEIGHBORING LAND OR PUBLIC ROADWAYS FROM THEIR NORMAL CONDITION. DURING AND AT THE END OF EACH DAY OF TOPSOIL STRIPPING, THE DISTURBED SOIL IS TO BE TREATED WITH OEPA RECOMMENDED DUST SUPPRESSANTS SO THAT DUST DOES NOT ACCUMULATE NOR HAVE THE ABILITY TO SPREAD ONTO NEIGHBORING PROPERTIES, PUBLIC ROADWAYS, OR INTO STORM SEWER STRUCTURES DURING NORMAL WORKING HOURS.
11. ALL REUSABLE EXCAVATED EARTH IS TO BE PLACED AT A SEPARATE STOCKPILE LOCATION AS SHOWN ON THIS SWPPP, WHICH IS TO BE SURROUNDED BY SILT FENCE OR FILTER SOCK AT THE END OF THE FIRST DAY OF BUILDING OF THE STOCKPILES. IF THE STOCKPILE IS TO REMAIN UNDISTURBED FOR LONGER THAN A PERIOD OF 7 DAYS, THEN TEMPORARY SEEDING MUST BE PERFORMED ON THE STOCKPILE AS PER SPECIFICATIONS OF THE SWPPP. SILT FENCE OR FILTER SOCKS MUST BE PLACED AROUND THE PERIMETER OF THE SOIL STOCKPILE ONCE IT HAS BEEN ESTABLISHED.
12. TEMPORARY SEEDING IS TO TAKE PLACE AS PER THE SPECIFICATIONS DESCRIBED ON THE PLANS. TEMPORARY SEEDING IS TO BE PLACED IN AREAS THAT WILL REMAIN IDLE FOR LONGER THAN 7 DAYS.
13. CONSTRUCTION VEHICLES USED IN CONCRETE RELATED WORK ARE TO BE CLEANED OFF AT THE CONCRETE WASH OUT AREA AS DEPICTED ON THIS SWPPP. THIS IS TO BE PERFORMED AT THE END OF EACH DAY OF CONCRETE DEMOLITION AND AT THE END OF ENTIRE CONCRETE DEMOLITION PORTION OF PROJECT. IF THE PRIMARY CONCRETE WASH OUT AREA BECOMES TOO HARD AND DOES NOT ALLOW THE CONCRETE WASH OFF TO PROPERLY WASH OUT, THEN A NEW WASH OUT AREA SHALL BE CREATED AND USED FOR CLEANING WHILE THE OTHER WASH OUT AREA IS REPAIRED.
14. ALL EXCAVATED UTILITY TRENCHES MUST BE STABILIZED AT THE END OF EACH DAY WITH GRAVEL BACKFILL FROM THE BOTTOM OF THE TRENCH TO THE SURFACE TO PREVENT EROSION OF THE TRENCH OVERNIGHT.
15. ALL SPARE AND WASTE CONSTRUCTION MATERIALS ARE TO BE DISPOSED OF IN WASTE CONTAINERS, WHICH ARE TO BE EMPTIED PRIOR TO REACHING THEIR MAXIMUM CAPACITY. SPARE CONSTRUCTION MATERIALS MAY ALSO BE TRANSPORTED OFFSITE TO AN APPROPRIATE LOCATION DETERMINED BY THE CONTRACTOR (I.E. THE CONTRACTOR'S STORAGE WAREHOUSE), OTHERWISE MATERIALS ARE TO BE DISPOSED OF AT AN OFFSITE CONSTRUCTION AND DEBRIS DEMOLITION LANDFILL AS PER ORC 3714.
16. WHEN TOXIC MATERIALS (I.E. FUEL) ARE USED TO CLEAN THE MACHINERY, THE CLEANING MUST TAKE PLACE ON THE STAGING AREA. THE STAGING AREA MUST BE BARRICADED/BERMED AS TO NOT ALLOW RUNOFF FROM THE STAGING AREA ONTO PERMEABLE AREAS. THE TOXIC RUNOFF FROM CLEANING OF MACHINERY IS TO BE COLLECTED VIA VACUUM AND PLACED INTO BARRELS WHICH ARE TO BE DISPOSED OF OFF SITE AT A CONSTRUCTION AND DEBRIS DEMOLITION LANDFILL AS PER ORC 3714.

SWP3 INSPECTIONS

1. TEMPORARY BMPS ARE TO BE INSPECTED WEEKLY AND AFTER EVERY RAIN EVENT OF 0.5 INCHES WITHIN A 24 HOUR PERIOD.
2. AN INSPECTION WAIVER REQUEST IS TO BE SUBMITTED TO THE OEPA TO REDUCE THE AMOUNT OF MONTHLY INSPECTION IF THE SITE IS TO LIE DORMANT FOR AN EXTENDED PERIOD OF TIME.
3. INSPECTIONS ARE TO BE PERFORMED BY "QUALIFIED INSPECTION PERSONNEL." INSPECTION RECORDS ARE TO BE KEPT FOR A MINIMUM 3 YEARS AFTER THE TERMINATION OF CONSTRUCTION ACTIVITIES.
4. AN INSPECTION CHECKLIST WILL BE COMPLETED AND SIGNED BY THE INSPECTOR AFTER EVERY INSPECTION.
5. NON-SEDIMENT BMPS ARE TO BE REPAIRED WITHIN 3 DAYS OF INSPECTION AND SEDIMENT PONDS ARE TO BE REPAIRED AND CLEANOUT WITHIN 10 DAYS OF INSPECTION. BMPS THAT ARE NOT MEETING THE INTENDED FUNCTION OR HAVE NOT BEEN INSTALLED ARE TO BE REINSTALLED/INSTALLED WITHIN 10 DAYS OF INSPECTION.

APPENDIX G – SWPPP AMENDMENT LOG

SWPPP CONTACT:			
AMENDMENT NUMBER	DESCRIPTION OF THE AMENDMENT	DATE OF AMENDMENT	AMENDMENT PREPARED BY

APPENDIX I – GRADING AND STABILIZATION ACTIVITIES LOG

SWPPP CONTACT:				
DATE GRADING ACTIVITY INITIATED	DESCRIPTION OF GRADING ACTIVITY	DATE GRADING ACTIVITY CEASED (INDICATE TEMPORARY OR PERMANENT)	DATE STABILIZATION MEASURED INITIATED	DESCRIPTION OF STABILIZATION MEASURE AND LOCATION

TEMPORARY SEEDING SPECIFICATIONS			
SEEDING DATE	SPECIES	LB/1,000 FT²	LB/ACRE
MARCH 1 TO AUGUST15	OATS TALL FESCUE ANNUAL RYEGRASS	3 1 1	128 (4 BUSHEL) 40 40
	PERENNIAL RYEGRASS TALL FESCUE ANNUAL RYEGRASS	1 1 1	40 40 40
	ANNUAL RYEGRASS PERENNIAL RYEGRASS CREEPING RED FESCUE KENTUCKY BLUEGRASS	1.25 3.25 0.40 0.40	55 142 17 17
	OATS TALL FESCUE ANNUAL RYEGRASS	3 1 1	128 (4 BUSHEL) 40 40
AUGUST 16 TO NOVEMBER 1	RYE TALL FESCUE ANNUAL RYEGRASS	3 1 1	112 (2 BUSHEL) 40 40
	WHEAT TALL FESCUE ANNUAL RYEGRASS	3 1 1	120 (2 BUSHEL) 40 40
	PERENNIAL RYEGRASS TALL FESCUE ANNUAL RYEGRASS	1 1 1	40 40 40
	ANNUAL RYEGRASS PRENNIAL RYEGRASS CREEPING RED FESCUE KENTUCKY BLUEGRASS	1.25 3.25 0.40 0.40	40 40 40 –
NOVEMBER 1 TO FEBRUARY 29	USE MULCH ONLY, SODDING PRACTICES, OR DORMANT SEEDING.		
NOTE: OTHER APPROVED SEED SPECIES MAY BE APPROVED.			

ADDITIONAL TEMPORARY STABILIZATION NOTES:

1. TEMPORARY SEEDING IS REQUIRED FOR ANY AREAS THAT WILL REMAIN IDLE OVER THE WINTER PRIOR TO THE ONSET OF WINTER WEATHER.
2. TEMPORARY SEEDING IS REQUIRED WITHIN 2 DAYS OF THE MOST RECENT DISTURBANCE FOR AN AREA WITHIN 50 FEET OF A SURFACE WATER OF THE STATE AND NOT AT FINAL GRADE THAT WILL REMAIN IDLE FOR 14 DAYS OR MORE.
3. TEMPORARY SEEDING IS REQUIRED ON ANY DISTURBED AREA, INCLUDING SOIL STOCKPILES THAT WILL LIE DORMANT FOR MORE THAN 14 DAYS, BUT LESS THAN ONE YEAR AND NOT WITHIN 50 FEET OF A SURFACE WATER OF THE STATE WITHIN 7 DAYS OF THE MOST RECENT DISTURBANCE.

TEMPORARY SEEDING SPECIFICATIONS

PERMANENT SEEDING SPECIFICATIONS			
SEED MIX	SEEDING RATE		NOTES
	LB/ACRE	LB/1,000 FT²	
GENERAL USE			
CREEPING RED FESCUE DOMESTIC RYEGRASS KENTUCKY BLUEGRASS	20–40 10–20 20–40	0.50–1.00 0.25–0.50 0.50–1.00	FOR CLOSE MOWING AND FOR WATERWAYS WITH <2.0 FT/SEC VELOCITY
TALL FESCUE	40–50	1.00–1.25	
TURF-TYPE (DWARF) FESCUE	90	2.25	
STEEP BANKS OR CUT SLOPES			
TALL FESCUE	40–50	1.00–1.25	
CROWN VETCH TALL FESCUE	10–20 20–30	0.25–0.50 0.50–0.75	DO NOT SEED LATER THAN AUGUST
FLAT PEA TALL FESCUE	20–25 20–30	0.50–0.75 0.50–0.75	DO NOT SEED LATER THAN AUGUST
ROAD DITCHES AND SWALES			
TALL FESCUE	40–50	1.00–1.25	
TURF-TYPE (DWARF) FESCUE KENTUCKY BLUEGRASS	90 5	2.25 0.10	
LAWNS			
KENTUCKY BLUEGRASS PERENNIAL RYEGRASS	100–120 –	2.00 2.00	
KENTUCKY BLUEGRASS CREEPING RED FESCUE	100–120 –	2.00 1.50	FOR SHADED AREAS
NOTE: FOLLOWING SOIL TEST RECOMMENDATIONS IS PREFERRED TO FERTILIZER RATES SHOWN ABOVE			

ADDITIONAL PERMANENT SEEDING REQUIREMENTS:

1. PERMANENT SEEDING IS REQUIRED FOR ANY DISTURBED AREA THAT WILL LIE DORMANT FOR ONE YEAR OR MORE WITHIN 7 DAYS OF THE MOST RECENT DISTURBANCE.
2. PERMANENT SEEDING IS REQUIRED FOR ANY AREA WITHIN 50 FEET OF A SURFACE WATER BODY OF THE STATE AND AT FINAL GRADE WITHIN 2 DAYS OF REACHING FINAL GRADE.
3. PERMANENT SEEDING IS REQUIRED FOR ANY AREA AT FINAL GRADE WITHIN 7 DAYS OF REACHING FINAL GRADE.

PERMANENT SEEDING SPECIFICATIONS

SPECIFICATIONS FOR
CONSTRUCTION ENTRANCE
(NOT TO SCALE)

1. STONE SIZE-ODOT #2(1.5-2.5 INCH) STONE SHALL BE USED, OR RECYCLED CONCRETE EQUIVALENT. WHEN THE CONSTRUCTION ENTRANCE IS PROPOSED IN AN EXISTING PAVED AREA, THE EXISTING PAVEMENT MAY BE UTILIZED IN LIEU OF STONE.
2. LENGTH-THE CONSTRUCTION ENTRANCE SHALL BE AS LONG AS REQUIRED TO STABILIZE HIGH TRAFFIC AREAS BUT NOT LESS THAN 70 FT. (EXCEPTION: APPLY 30 FT. MINIMUM TO SINGLE RESIDENCE LOTS).
3. THICKNESS-THE STONE LAYER SHALL BE AT LEAST 6 INCHES THICK FOR LIGHT DUTY ENTRANCES OR AT LEAST 10 INCHES FOR HEAVY DUTY USE.
4. WIDTH-THE ENTRANCE SHALL BE AT LEAST 14 FEET WIDE, BUT NOT LESS THAN THE FULL WIDTH AT POINTS WHERE INGRESS OR EGRESS OCCURS.
5. GEOTEXTILE-A GEOTEXTILE SHALL BE LAID OVER THE ENTIRE AREA PRIOR TO PLACING STONE. IT SHALL BE COMPOSED OF STRONG ROT-PROOF POLYMERIC FIBERS AND MEET THE FOLLOWING SPECIFICATIONS:
6. TIMING-THE CONSTRUCTION ENTRANCE SHALL BE INSTALLED AS SOON AS IS PRACTICABLE BEFORE MAJOR GRADING ACTIVITIES.
7. CULVERT-A PIPE OR CULVERT DISCONSTRUCTED UNDER THE ENTRANCE IF NEEDED TO PREVENT SURFACE WATER FROM FLOWING ACROSS THE ENTRANCE OR TO PREVENT RUNOFF FROM BEING DIRECTED OUT ONTO PAVED SURFACES.
8. WATER BAR-A WATER BAR SHALL BE CONSTRUCTED AS PART OF THE CONSTRUCTION ENTRANCE IF NEEDED TO PREVENT SURFACE RUNOFF FROM FLOWING THE LENGTH OF THE CONSTRUCTION ENTRANCE AND OUT ONTO PAVED SURFACES.
9. MAINTENANCE-TOP DRESSING OF ADDITIONAL STONE SHALL BE APPLIED AS CONDITIONS DEMAND. MUD SPILLED, DROPPED, WASHED OR TRACKED ONTO PUBLIC ROADS, OR ANY SURFACE WHERE RUNOFF IS NOT CHECKED BY SEDIMENT CONTROLS, SHALL BE REMOVED IMMEDIATELY. REMOVAL SHALL BE ACCOMPLISHED BY SCRAPING OR SWEEPING.
10. CONSTRUCTION ENTRANCES SHALL NOT BE RELIED UPON TO REMOVE MUD FROM VEHICLES AND PREVENT OFF-SITE TRACKING. VEHICLES THAT ENTER AND LEAVE THE CONSTRUCTION-SITE SHALL BE RESTRICTED FROM MUDDY AREAS.
11. REMOVAL-THE ENTRANCE SHALL REMAIN IN PLACE UNTIL THE DISTURBED AREA IS STABILIZED OR REPLACED WITH A PERMANENT ROADWAY OR ENTRANCE.

GEOTEXTILE SPECIFICATIONS FOR CONSTRUCTION ENTRANCE	
MINIMUM TENSILE STRENGTH	200 LBS.
MINIMUM PUNCTURE STRENGTH	80 PSI
MINIMUM TEAR STRENGTH	50 LBS.
MINIMUM BURST STRENGTH	320 PSI
MINIMUM ELONGATION	20%
EQUIVALENT OPENING SIZE	EOS<0.6 MM
PERMITTIVITY	1X10-3 CM./SEC.

SPECIFICATIONS FOR
CONSTRUCTION ENTRANCE
(NOT TO SCALE)

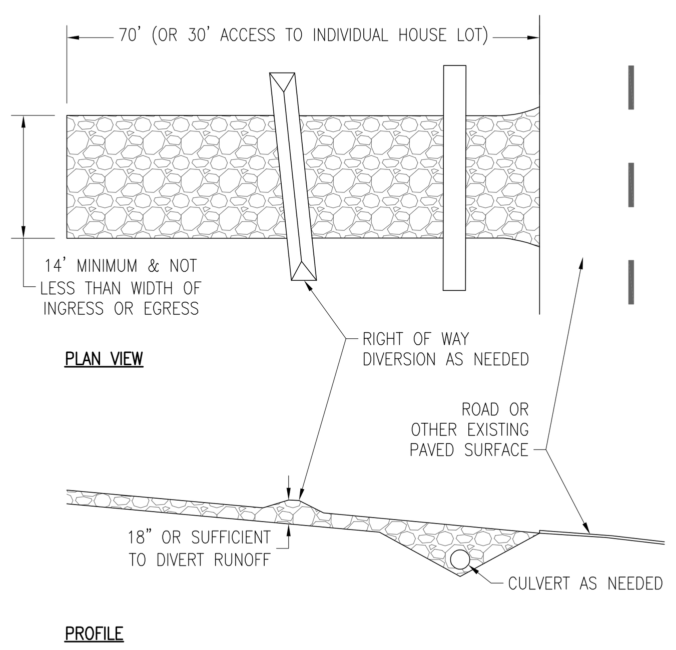

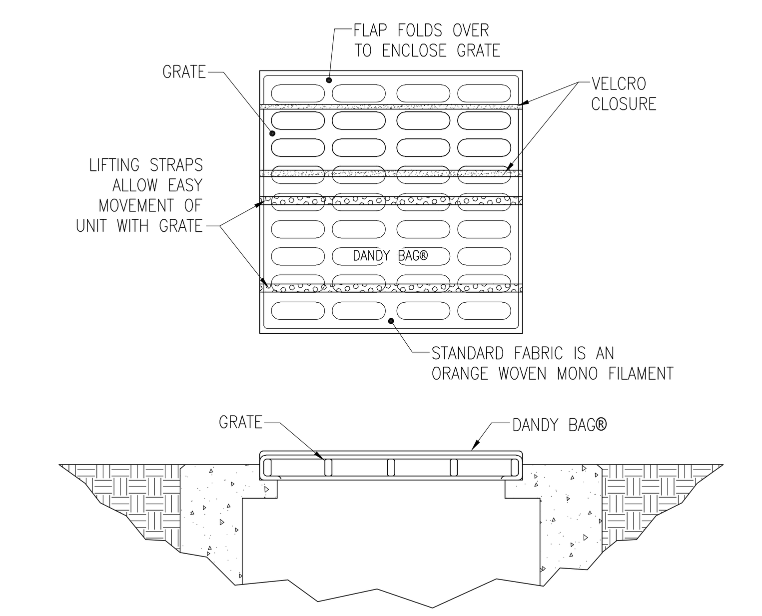

INSTALLATION AND MAINTENANCE GUIDELINES

INSTALLATION: THE EMPTY DANDY BAG® SHOULD BE PLACED OVER THE GRATE AS THE GRATE STANDS ON END. IF USING OPTIONAL OIL ABSORBENTS; PLACE ABSORBENT PILLOW IN POUCH, ON THE BOTTOM (BELOW-GRADE SIDE) OF THE UNIT. ATTACH ABSORBENT PILLOW TO TETHER LOOP. TUCK THE ENCLOSURE FLAP INSIDE TO COMPLETELY ENCLOSE THE GRATE. HOLDING THE LIFTING DEVICES (DO NOT RELY ON LIFTING DEVICES TO SUPPORT THE ENTIRE WEIGHT OF THE GRATE), PLACE THE GRATE INTO ITS FRAME.

MAINTENANCE: REMOVE ALL ACCUMULATED SEDIMENT AND DEBRIS FROM SURFACE AND VICINITY OF UNIT AFTER EACH STORM EVENT. REMOVE SEDIMENT THAT HAS ACCUMULATED WITHIN THE CONTAINMENT AREA OF THE DANDY BAG® AS NEEDED. IF USING OPTIONAL OIL ABSORBENTS; REMOVE AND REPLACE ABSORBENT PILLOW WHEN NEAR SATURATION.

ADS FLEX-STORM IS AN ACCEPTABLE INLET PROTECTION ALTERNATIVE.

** DANDY BAGS MAY ONLY BE USED FOR INLET PROTECTION WHEN THE DRAINAGE STRUCTURE IS COMPLETELY SURROUNDED BY PAVEMENT.

DANDY BAG**®
NOT TO SCALE

SPECIFICATIONS FOR
FILTER SOCK
(NOT TO SCALE)

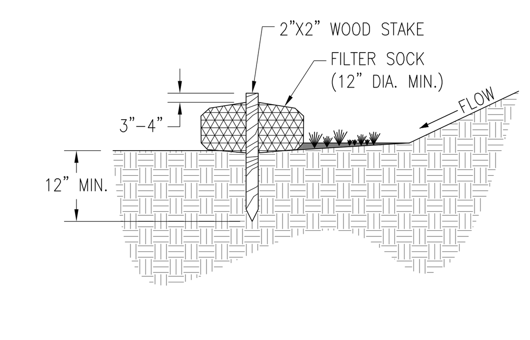

1. MATERIALS – COMPOST USED FOR FILTER SOCKS SHALL BE WEED, PATHOGEN AND INSECT FREE AND FREE OF REFUSE, CONTAMINANTS OR OTHER MATERIALS TOXIC TO PLANT GROWTH. THEY SHALL BE DERIVED FROM A WELL-DECOMPOSED SOURCE OF ORGANIC MATTER AND CONSIST OF PARTICLES RANGING FROM 3/8" TO 2".
2. FILTER SOCKS SHALL BE 3 OR 5 MILL CONTINUOUS, TUBULAR, HDPE 3/8" KNITTED MESH NETTING MATERIAL, FILLED WITH COMPOST PASSING THE ABOVE SPECIFICATIONS FOR COMPOST PRODUCTS.

INSTALLATION
3. FILTER SOCKS WILL BE PLACED ON A LEVEL LINE ACROSS SLOPES, GENERALLY PARALLEL TO THE BASE OF THE SLOPE OR OTHER AFFECTED AREA. ON SLOPES APPROACHING 2:1, ADDITIONAL SOCKS SHALL BE PROVIDED AT THE TOP AND AS NEEDED MID-SLOPE
4. FILTER SOCKS INTENDED TO BE LEFT AS A PERMANENT FILTER OR PART OF THE NATURAL LANDSCAPE, SHALL BE SEEDED AT THE TIME OF INSTALLATION OF ESTABLISHMENT OF PERMANENT VEGETATION.
5. FILTER SOCKS ARE NOT TO BE USED IN CONCENTRATED FLOW SITUATIONS OR IN RUNOFF CHANNELS.

MAINTENANCE:
6. ROUTINELY INSPECT FILTER SOCKS AFTER EACH SIGNIFICANT RAIN, MAINTAINING FILTER SOCKS IN A FUNCTIONAL CONDITION AT ALL TIMES.
7. REMOVE SEDIMENTS COLLECTED AT THE BASE OF THE FILTER SOCKS WHEN THE REACH 1/3 OF THE EXPOSED HEIGHT OF THE PRACTICE.
8. WHERE THE FILTER SOCK DETERIORATES OR FAILS, IT WILL BE REPAIRED OR REPLACED WITH A MORE EFFECTIVE ALTERNATIVE.
9. REMOVAL – FILTER SOCKS WILL BE DISPERSED ON SITE WHEN NO LONGER REQUIRED IN SUCH A WAY AS TO FACILITATE AND NOT OBSTRUCT SEEDLINGS.

SPECIFICATIONS FOR
GEOTEXTILE INLET PROTECTION
(NOT TO SCALE)

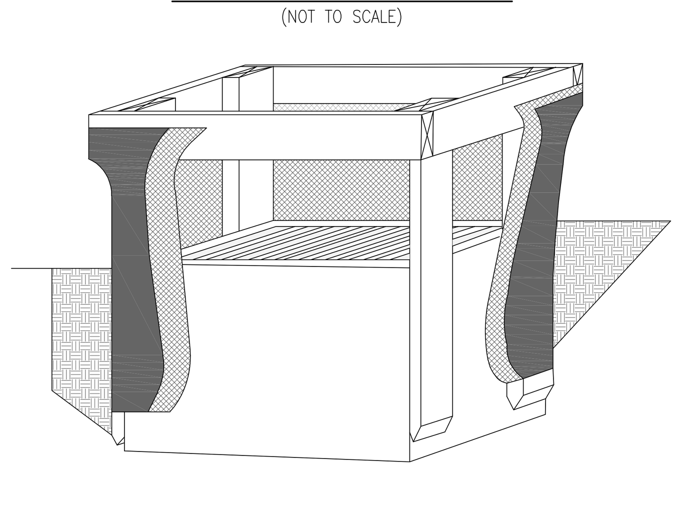

1. INLET PROTECTION SHALL BE CONSTRUCTED EITHER BEFORE UPSLOPE LAND DISTURBANCE BEGINS OR BEFORE THE INLET BECOMES FUNCTIONAL.
2. THE EARTH AROUND THE INLET SHALL BE EXCAVATED COMPLETELY TO A DEPTH OF AT LEAST 18 INCHES.
3. THE WOODEN FRAME SHALL BE CONSTRUCTED OF 2-INCH BY 4-INCH POSTS SHALL BE DRIVEN ONE (1 FT.) INTO THE GROUND AT FOUR CORNERS OF THE INLET AND THE TOP PORTION OF 2-INCH BY 4-INCH FRAME ASSEMBLED USING THE OVERLAP JOINT SHOWN. THE TOP OF THE FRAME SHALL BE AT LEAST 6 INCHES BELOW ADJACENT ROADS IF PONDED WATER WILL POSE A SAFETY HAZARD TO TRAFFIC.
4. WIRE MESH SHALL BE OF SUFFICIENT STRENGTH TO SUPPORT FABRIC WITH WATER FULLY IMPOUNDED AGAINST IT. IT SHALL BE STRETCHED TIGHTLY AROUND THE FRAME AND FASTENED SECURELY TO THE FRAME.
5. GEOTEXTILE MATERIAL SHALL HAVE AN EQUIVALENT OPENING SIZE OF 20-40 SIEVE AND BE RESISTANT TO SUNLIGHT. IT SHALL BE STRETCHED TIGHTLY AROUND THE FRAME AND FASTENED SECURELY. IT SHALL EXTEND FROM THE TOP OF THE FRAME TO 18 INCHES BELOW THE INLET NOTCH ELEVATION.
6. BACKFILL SHALL BE PLACED AROUND THE INLET IN COMPACTED 6-INCH LAYERS UNTIL THE EARTH IS EVEN WITH NOTCH ELEVATION ON ENDS AND TOP ELEVATION ON SIDES.
7. A COMPACTED EARTH DIKE OR CHECK DAM SHALL BE CONSTRUCTED IN THE DITCH LINE BELOW THE INLET IF THE INLET IS NOT IN A SDEPRESSION.THE TOP OF THE DIKE SHALL BE AT LEAST 6 INCHES HIGHER THAN THE TOP OF THE FRAME.
8. STRUCTURES IN NEED ON INLET PROTECTION IN PAVEMENT AREAS ARE TO USE DANDY BAGS OR FILTER SOCK TYPE INLET PROTECTION.

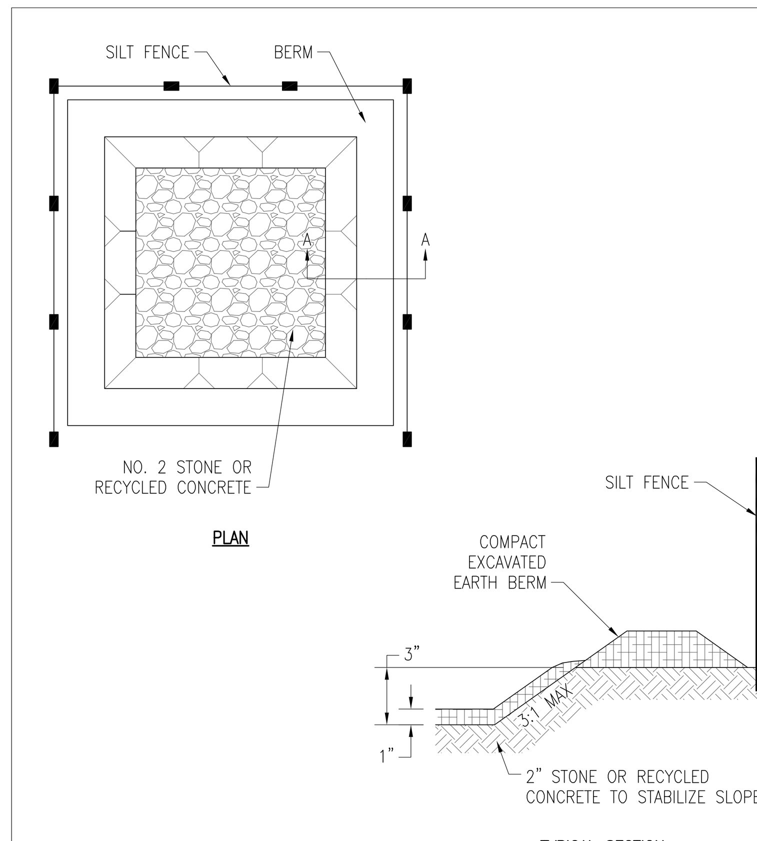

NOTES:
1. TEMPORARY TRUCK WASHOUT FACILITIES SHOULD BE CONSTRUCTED AS SHOWN ON THIS DETAIL. THE QUANTITY AND VOLUME SHOULD BE SUFFICIENT TO CONTAIN ALL LIQUID AND CONCRETE WASTE GENERATED BY WASHOUT OPERATIONS.
2. THE WASHOUT AREA SHALL BE LOCATED ADJACENT TO A STABILIZED DRIVE/AREA.
3. CONCRETE WASTE SHALL BE CLEANED OUT PERIODICALLY TO MAINTAIN AN ADEQUATE VOLUME.
4. FOLLOWING CONSTRUCTION, THE WASHOUT SHALL BE REMOVED BY CONTRACTOR.

TEMPORARY CONCRETE WASHOUT DETAIL
NOT TO SCALE

STATE OF OHIO
JOHN URBANICK
E-66506
REGISTERED PROFESSIONAL ENGINEER

ROCKAWAY CIVIL
Rockaway Civil LLC
10191 Sperry Road Kirtland Ohio 44094
440 655 8182 www.rockawaycivil.com

LAKEMETROPARKS

OHIO811.org Before You Dig

HEMLOCK RIDGE SERVICE DRIVE IMPROVEMENTS
5800 VROOMAN ROAD
LEROY TOWNSHIP, OH 44077

Project Name

Sheet Revision

1 BID 01-16-2025

Project Issue

SWP3-2

Sheet Name

C201

Sheet #

RC Project # 24-021

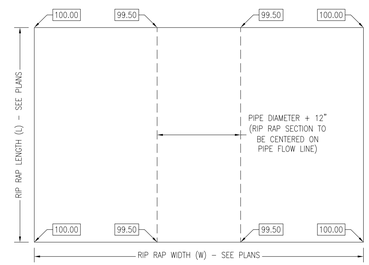

PLAN VIEW

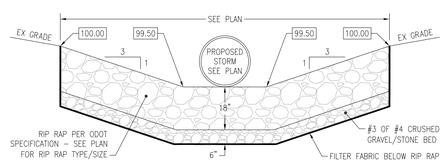

SECTION VIEW

NOTE: SEE PLAN FOR LENGTH & WIDTH OF RIP RAP SECTION

RIP–RAP DETAIL

NTS

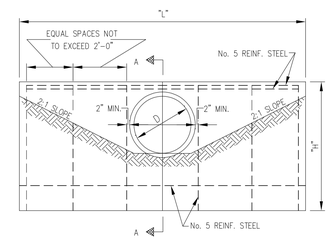

ELEVATION

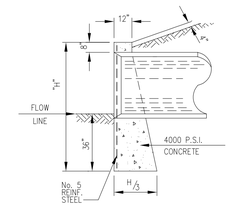

SECTION A – A

CHAMFER ALL EXPOSED CORNERS 3/4" OF AN INCH.

NOTE: WHERE SOIL BEARING CAPACITY IS LESS THAN 2600 P.S.F., INCREASE WIDTH OF BASE.

DIMENSIONS			QUANTITIES ONE HEADWALL	
DIAMETER	"H"	"L"	CONCRETE CU. YDS.	REINFORCING STEEL LBS.
12"	4'–11"	5'–8"	1.2	30
15"	5'–2"	7'–0"	1.7	41
18"	5'–5"	8'–4"	2.2	57
21"	5'–8"	9'–8"	2.8	62
24"	5'–11"	11'–0"	3.3	69
30"	6'–5"	13'–8"	4.7	92
36"	7'–0"	16'–4"	6.5	105

FULL CONCRETE HEADWALL DETAIL

NO SCALE

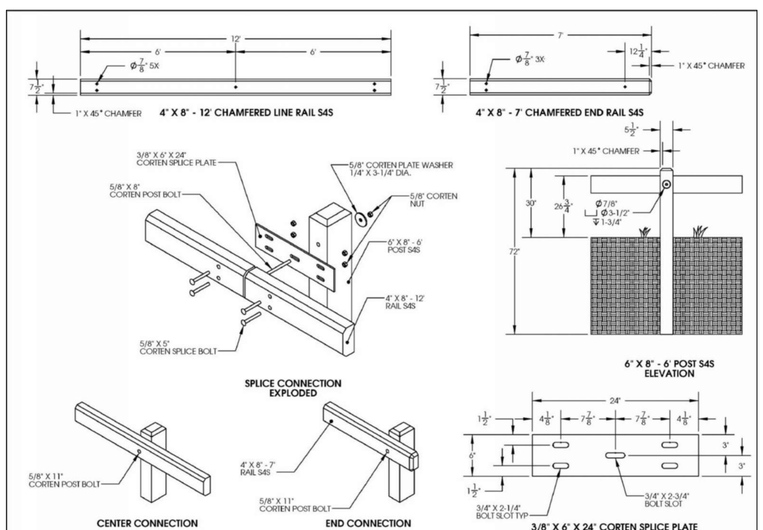

DESCRIPTION: SQUARE AMERICAN TIMBER RAIL	DRAWN BY: MBC DATE: 12-22-09 REVISIONS:	**PROPRIETARY AND CONFIDENTIAL** THE INFORMATION CONTAINED IN THIS DRAWING IS THE SOLE PROPERTY OF AMERICAN TIMBER AND STEEL CORP. ANY REPRODUCTION IN PART OR AS A WHOLE WITHOUT THE WRITTEN PERMISSION OF AMERICAN TIMBER CORP. AND STEEL IS PROHIBITED.	4832 PLANK RD. P.O. BOX 767 NORWALK, OH 44857 P: 800-668-1610 F: 419-663-1077 AMTM.COM

AMERICAN TIMBER AND STEEL

WOOD GUARDRAIL DETAIL

1. CONFIRM FINAL GUARDRAIL LOCATIONS WITH LAKE METROPARKS.
2. POST HOLES SHALL BE AUGERED TO THE DEPTH SHOWN IN THE DETAIL AND BACKFILLED WITH PROPERLY TAMPED, ONSITE SOILS.

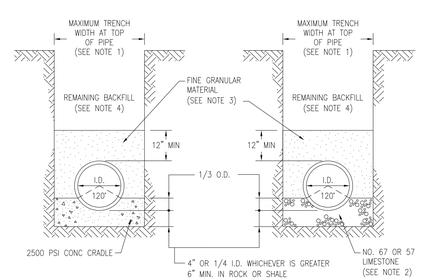

NOTES:

1. MAXIMUM TRENCH AT TOP OF PIPE SHALL BE O.D.+ 24" FOR ALL PIPES UP TO AND INCLUDING 24" I.D.; O.D.+ 30" FOR PIPE LARGER THAN 24" I.D. TO 66" I.D.; AND O.D.+ 48" FOR PIPE SIZES 72" AND OVER.
2. PIPE BEDDING SHALL BE NO. 67 OR NO. 57 LIMESTONE.
3. PIPE BACKFILL SHALL BE NO. 67 OR NO. 57 LIMESTONE TO 12" ABOVE TOP OF PIPE.
4. ALL BACKFILL SHALL BE TAMPED WITH MACHINE MOUNTED TAMPING EQUIPMENT. NO FLOODING, JETTING OR PUDDLING OF BACKFILL WILL BE PERMITTED. BACKFILL SHALL BE COMPLETED TO 100% OF MAXIMUM LABORATORY DRY DENSITY PER ASTM D698. REMAINING TRENCH BACKFILL SHALL BE PREMIUM FILL (LIMESTONE SCREENINGS) TO TOP OF TRENCH UNDER PAVEMENT.
5. ALL BEDDING SHALL BE CLASS 'B' UNLESS OTHERWISE NOTED ON THE PLANS OR AUTHORIZED BY THE ENGINEER.
6. SLAG SHALL NOT BE USED.
7. CLAY DAMS SHALL BE REQUIRED WHEN AND WHERE NECESSARY PER PLAN OR AS DIRECTED BY THE ENGINEER.

SEWER TRENCH & BEDDING DETAILS

NTS

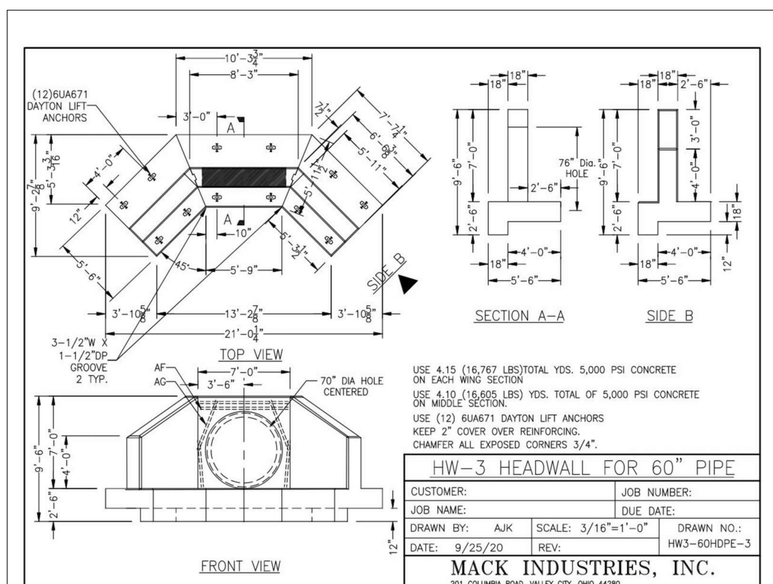

USE 4.15 (16,767 LBS)TOTAL YDS. 5,000 PSI CONCRETE ON EACH WING SECTION

USE 4.10 (16,605 LBS) YDS. TOTAL OF 5,000 PSI CONCRETE ON MIDDLE SECTION.

USE (12) 6UA671 DAYTON LIFT ANCHORS

KEEP 2" COVER OVER REINFORCING.

CHAMFER ALL EXPOSED CORNERS 3/4".

HW–3 HEADWALL FOR 60" PIPE		
CUSTOMER:	JOB NUMBER:	
JOB NAME:	DUE DATE:	
DRAWN BY: AJK	SCALE: 3/16"=1'–0"	DRAWN NO.: HW3–60HDPE–3
DATE: 9/25/20	REV:	

MACK INDUSTRIES, INC.
201 COLUMBIA ROAD, VALLEY CITY, OHIO 44280

STATE OF OHIO
JOHN
URBANICK
E-66506
REGISTERED
PROFESSIONAL ENGINEER

ROCKAWAY CIVIL
Rockaway Civil LLC
10191 Sperry Road Kirtland Ohio 44094
440 655 8182 www.rockawaycivil.com

LAKEMETROPARKS

OHIO811.org
Before You Dig

HEMLOCK RIDGE SERVICE DRIVE IMPROVEMENTS

5800 VROOMAN ROAD
LEROY TOWNSHIP, OH 44077

Project Name

Sheet Revision

1	BID	01-16-2025

Project Issue

DETAILS

Sheet Name

C300

Sheet #

RC Project # 24-021